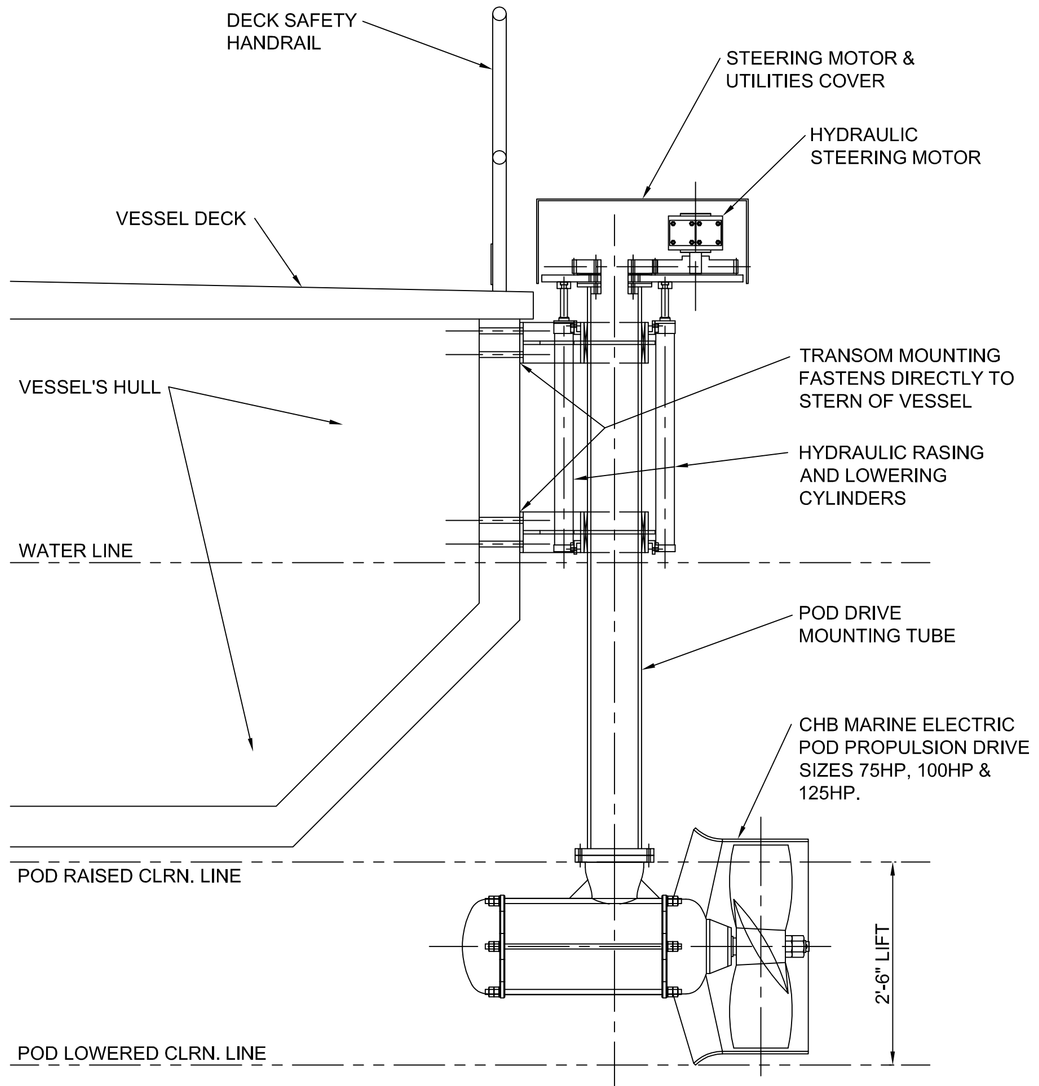

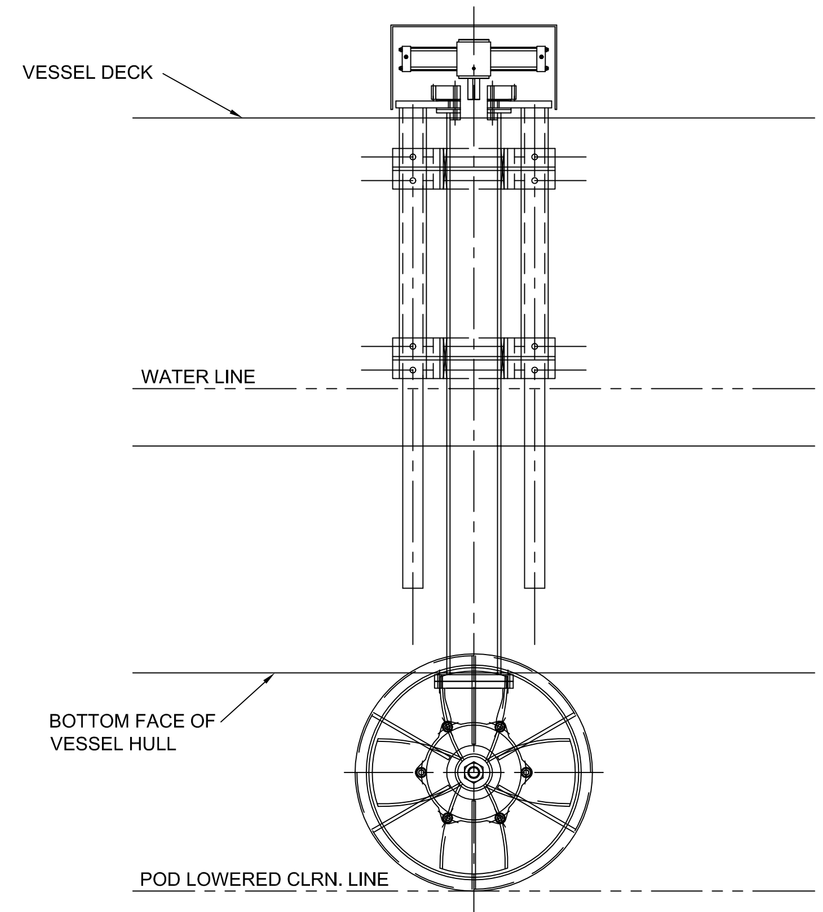

180° ROTATION CHB MARINE POD PROPULSION DRIVE IN LOWERED POSITION

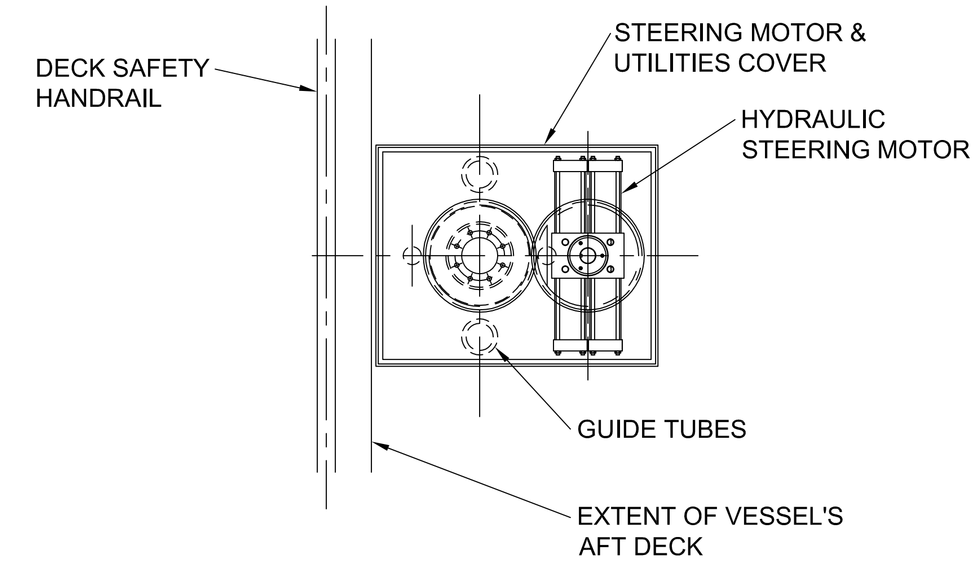

STEERING MOTOR & UTILITIES VIEW

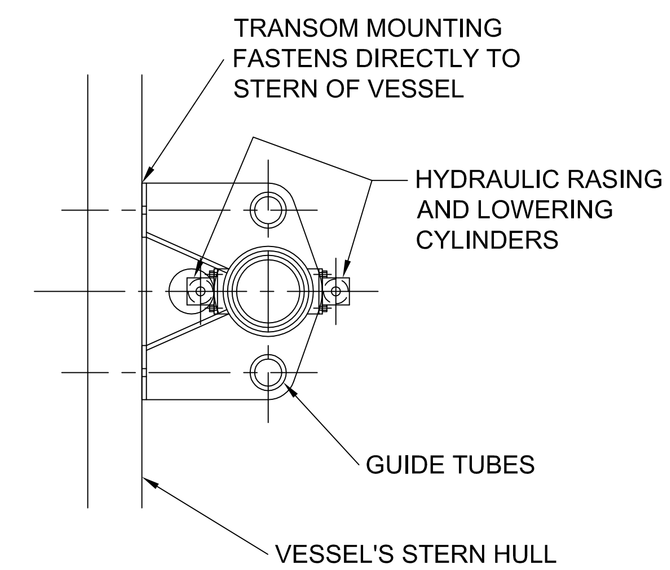

TRANSOM MOUNTING VIEW

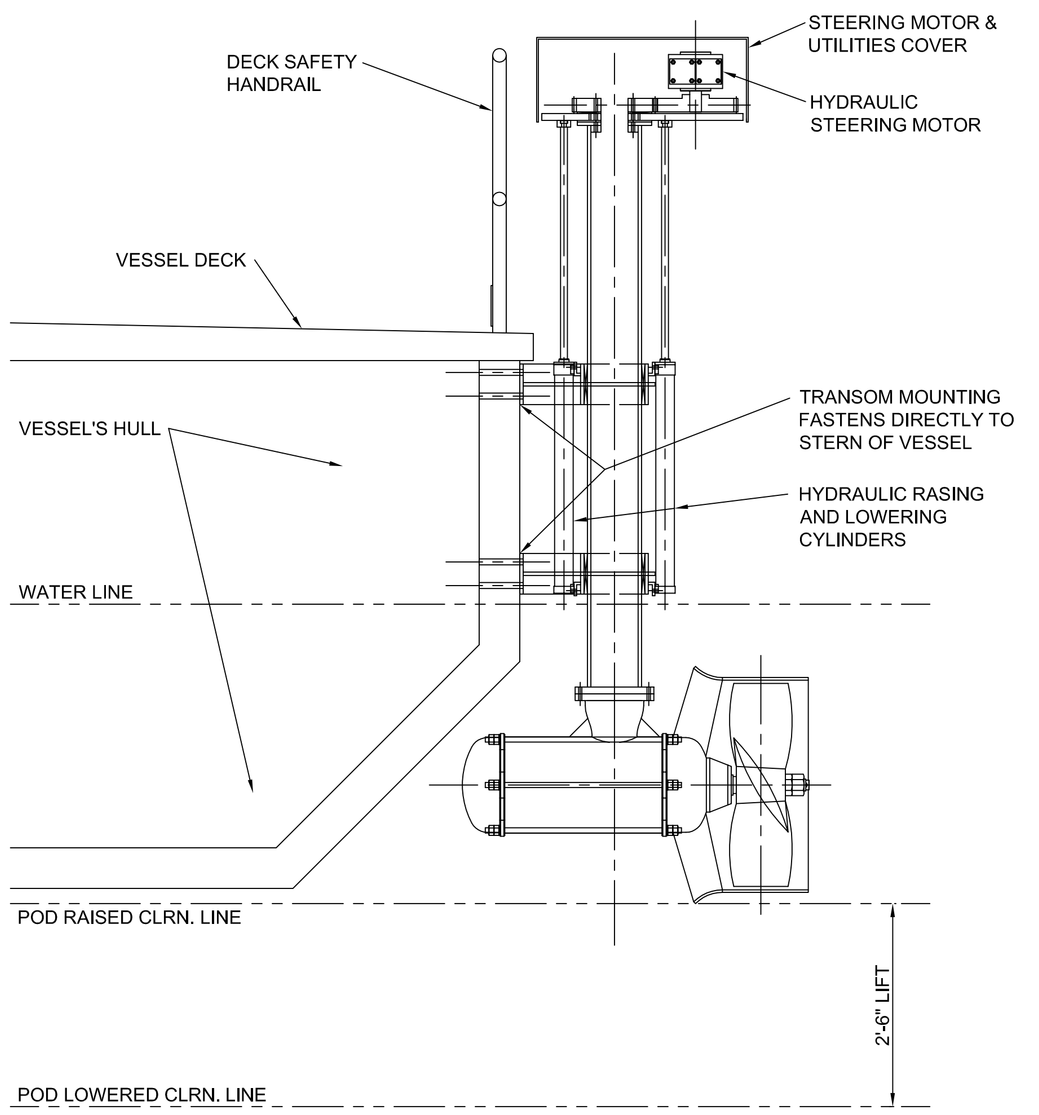

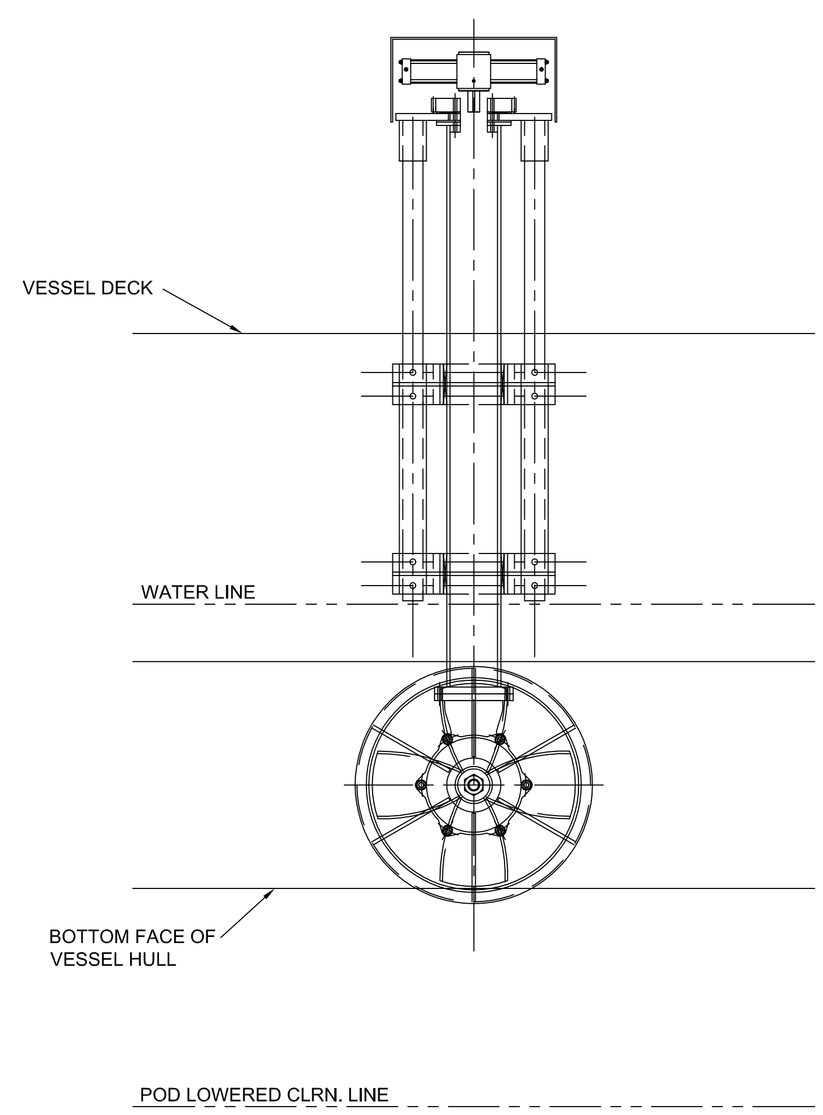

180° ROTATION CHB MARINE POD PROPULSION DRIVE IN RAISED POSITION

TECHANICAL SPECIFICATION DATA	
MODEL	TRANSOM MOUNTING 180° ROTATION W/ VERTICAL LIFT
MODEL IDENTIFICATION / NUMBER	TM8-180-30
TYPE OF MOUNTING	TRANSOM MOUNTING
MOUNTING TUBE SIZE	8" O.D.
MOUNTING TUBE ROTATION	180°
POD UNIT VERTICAL LIFT	30"
X	X
X	X
X	X
X	X
X	X
X	X
X	X
X	X
X	X
X	X
X	X
X	X

EDMUND A. OKIE, P.E.
ENGINEERING – FABRICATION – CONSTRUCTION
INDUSTRIAL – COMMERCIAL – RESIDENTIAL – MARINE
3009 IMPERIAL OAKS DRIVE, RALEIGH, NORTH CAROLINA 27614
PHONE 919-562-8162 E-MAIL: OKIE@NC.RR.COM

©2011, Edmund A. Okie, P.E.

CHB MARINE ELECTRIC POD DRIVES
TRANSOM MOUNTING DEMINSIONAL & SPECIFICATION
CAROLINA HOUSEBOATS dba
3009 IMPERIAL OAKS DRIVE
RALEIGH, NC 27614

CHB MARINE POD TRANSOM MOUNTING

Date 09/18/2010
Proj. # 05-22XX-XX
Drwn EAO Chkd EAO
Revisions

Sheet
TM8-180

©2011, Edmund A. Okie, P.E.